REV.	ECN NO.	MODIFIED MARK	APPROVED
A	———	FIRST RELEASE	

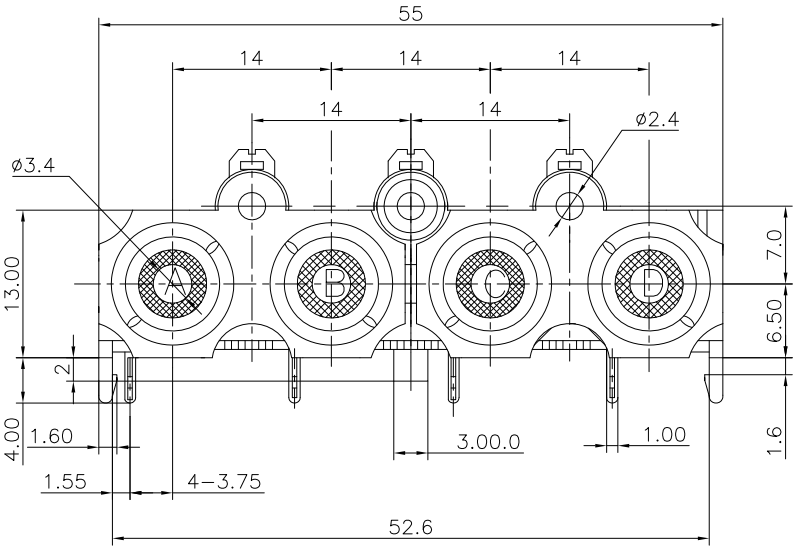

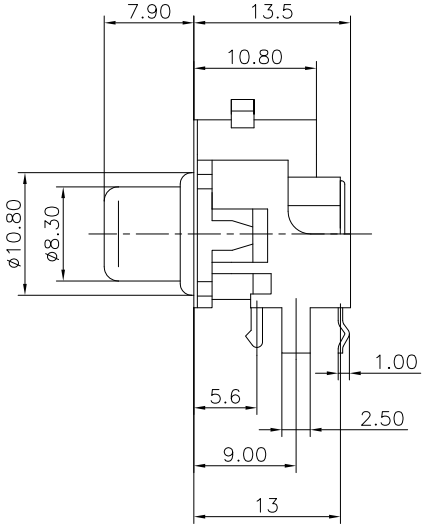

NOTES:
ELECTRICAL:
1:RATED CURRENT: 0.2A Max.
2:RATED VOLTAGE: 50V AC.
3:CONTACT RESISTANCE: 30 MILLIOHMS Max.
AFTER TESTING:100 MILLIOHMS Max.
4:INSULATION RESISTANCE: 100 MEGAOHMS Min.
5:DIELECTRIC WITHSTANDING VOLTAGE: 500 VAC Min.
MECHANICAL:
1:INSERTION FORCE: 3N−30N.
2:WITHDRAWAL FORCE: 3N−30N.
3:DURRABILITY: 100 CYCLES.
ENVIRONMENTAL:
TEMPERATURE RANGE: −20°C TO 60°C.

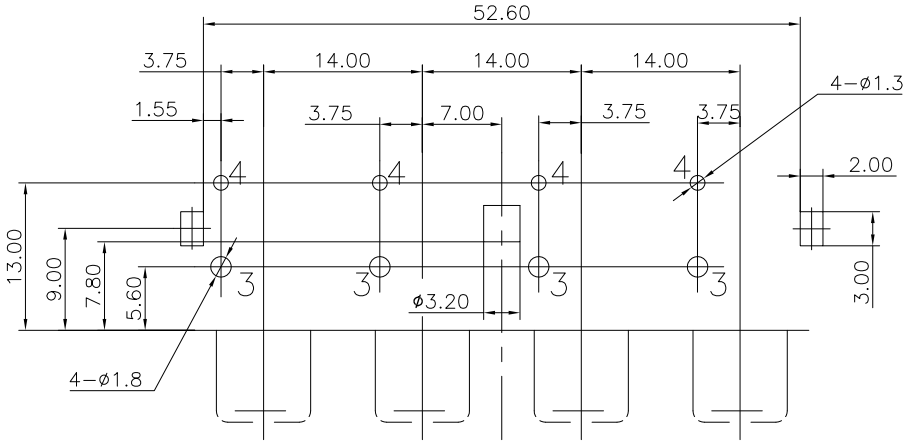

PCB LAYOUT
TOP VIEW

SCHEMATIC

GAUGE PLUG:

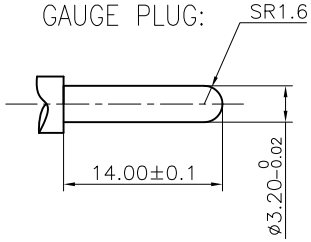

ANGLE	±5°
63 < L	±0.5
16 < L ≤ 63	±0.4
4 < L ≤ 16	±0.3
L ≤ 4	±0.2

TOL TABLE:

THIS DOCUMENT IS THE PROPERTY OF TRENPRO TECHNOLOGY CO., LTD.NO PART THEREOF MAY BE REPRODUCED AND USED WITHOUT THE PRIOR WRITTEN CONSENT OF THE OWNER

MODEL NAME: RCA−414P
(PART NO.)

广东正宝科技有限公司
GUANGDONG TRENPRO TECHNOLOGY CO., LTD.

MAT'L: See table	DESIGN: X.H.Wang 11/15'18	TITLE: RCA PIN JACK			
FINISH: See table	CHECKED: L.W.Wu 11/15'18	DWG NO.:			REV.: A
Q'TY:/	APPROVED:X.Q.Hu 11/15'18	UNIT: mm	VIEW:	SCALE: 5:1	SHEET: 1/1	SIZE: A3